D 外形尺寸 imensions (mm)

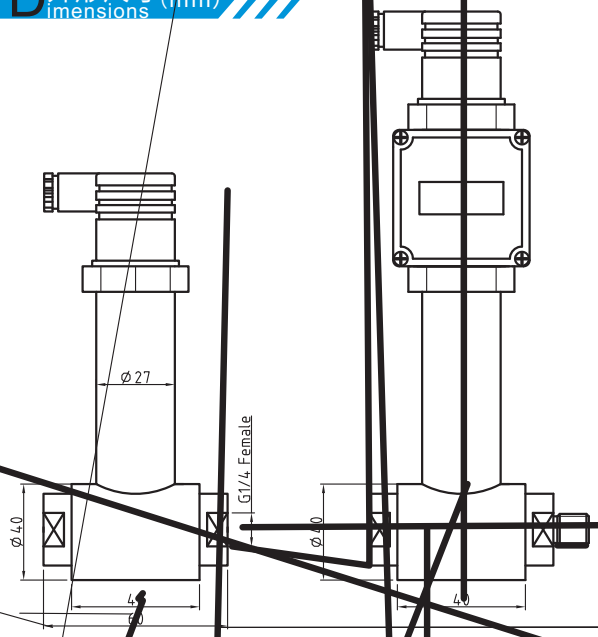

GPT250							选型说明
0/X							0~5kPa...5MPa
	M						MPa
	B						Bar
	P						Psi
		D					
			T1				4~20mA
			T2				0~5VDC
			T3				1~5VDC
			T4				0~10VDC
				V1			8~36VDC
				V2			10~30VDC
				V3			5VDC
					A1		0.25%FS
					A2		0.5%FS
						S1	304 SS
						S2	316L SS
						C1	M20x1.5(male)
						C2	G1/4(male)
						C3	G1/2(male)
						C4	1/4NPT(male)
						CX	